HENDERSON

SOLTAIRE 180

Fitting Instructions (Stainless Steel)

57/180/SS Hanger
Soffit Fix

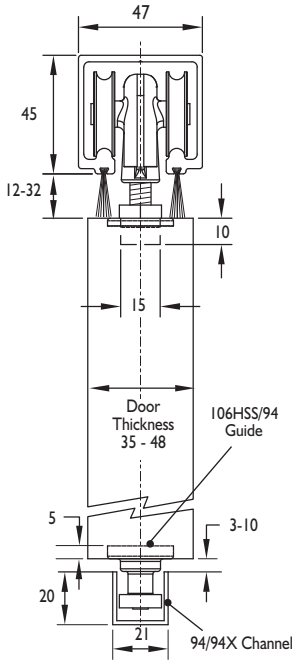

56/180/SS Hanger
Face Fix

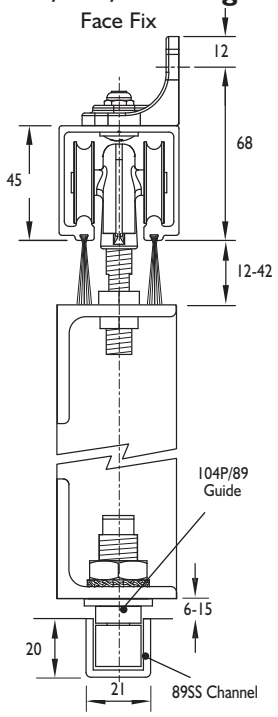

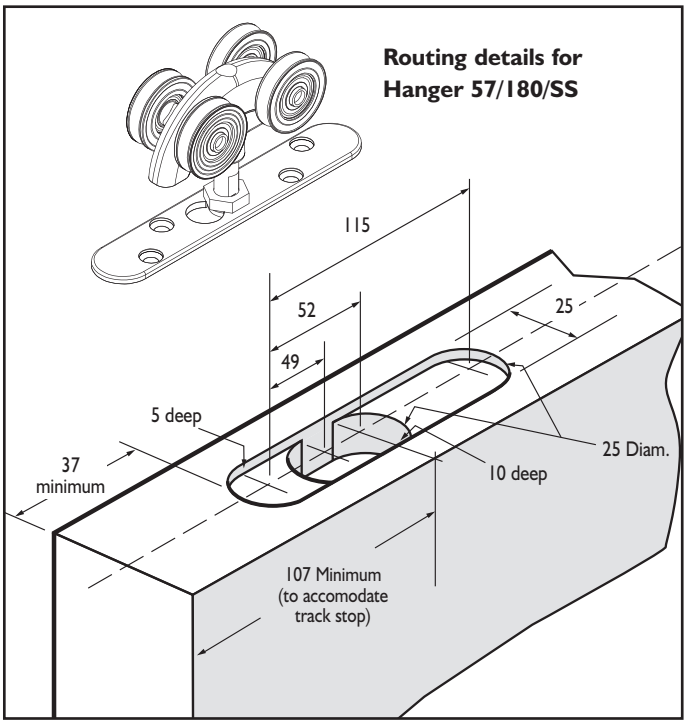

56X/180/SS Hanger
Face Fix

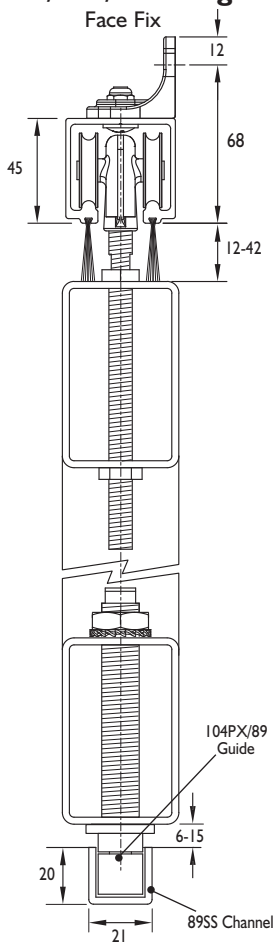

52/180/SS Hanger
Soffit Fix

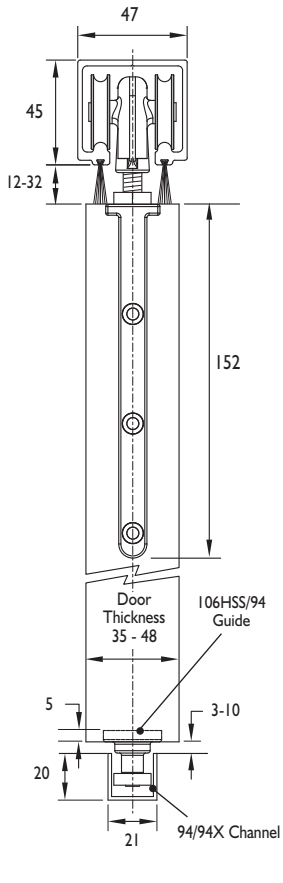

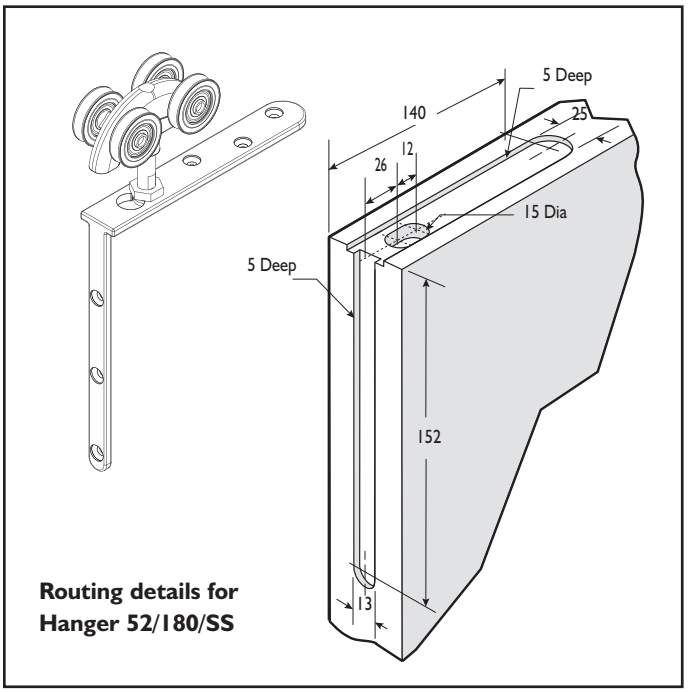

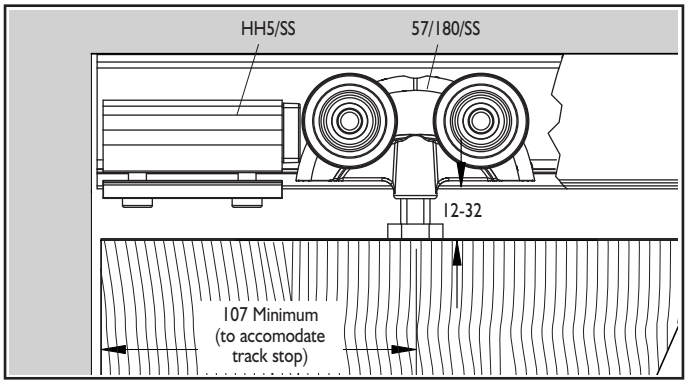

(All dimensions are in mm.)

P C Henderson Limited, Durham Road, Bowburn, County Durham DH6 5NG, UK. Web: www.pchenderson.com
UK Customer Services Department: Tel: +44 (0)191 377 7345 Fax: +44 (0)191 377 3116 Email: sales@pchenderson.com
Export Department: Tel: +44 (0)191 377 7346 Fax: +44 (0)191 377 0755. Email: international@pchenderson.com.
For all technical queries email our Technical Department: technical@pchenderson.com

Part No: 220531 Issue 4 - January 2015